CRAFTSMAN®

owners manual

INDUCTIVE TIMING LIGHT

LUZ DE REGULACION INDUCTIVA

MODEL NOS.
21027
21023

Caution:
Read Rules For Safe Operation and Complete Operating Test Procedures Carefully

INDUCTIVE ADVANCE TIMING LIGHT

LUZ DE REGULACION INDUCTIVA DEL AVANCE

Precaución:
Lea todas las reglas de seguridad y prosedimientos de prueba cuidadosamente.

- SAFETY RULES
- INTRODUCTION
- OPERATION
- REPAIR PARTS

- REGLAS DE SEGURIDAD
- INTRODUCCION
- OPERACION
- PIEZAS DE RECAMBIO

SEARS, ROEBUCK AND CO. U.S.A.
HOFFMAN ESTATES, ILLINOIS 60179

PRINTED IN U.S.A.

0002-013-2162

SAFETY GUIDELINES

TO PREVENT ACCIDENTS THAT COULD RESULT IN SERIOUS INJURY AND/OR DAMAGE TO YOUR VEHICLE OR TEST EQUIPMENT, CAREFULLY FOLLOW THESE SAFETY RULES AND TEST PROCEDURES

SAFETY EQUIPMENT

Fire Extinguisher

Never work on your car without having a suitable fire extinguisher handy. A 5-lb or larger CO_2 or dry chemical unit specified for gasoline/chemical/electrical fires is recommended.

Fireproof Container

Rags and flammable liquids should be stored only in fireproof, closed metal containers. A gasoline-soaked rag should be allowed to dry thoroughly outdoors before being discarded.

Safety Goggles

We recommend wearing safety goggles when working on your car, to protect your eyes from battery acid, gasoline, and dust and dirt flying off moving engine parts.

NOTE: Never look directly into the carburetor throat while the engine is cranking or running, as sudden backfire can cause burns.

LOOSE CLOTHING AND LONG HAIR (MOVING PARTS)

Be very careful not to get your hands, hair or clothes near any moving parts such as fan blades, belts and pulleys or throttle and transmission linkages. Never wear neckties or loose clothing when working on your car.

JEWELRY

Never wear wrist watches, rings or other jewelry when working on your car. You'll avoid the possibility of catching on moving parts or causing an electrical short circuit which could shock or burn you.

VENTILATION

The carbon monoxide in exhaust gas is highly toxic. To avoid asphyxiation, always operate vehicle in a well-ventilated area. If vehicle is in an enclosed area, exhaust should be routed directly to the outside via leakproof exhaust hose.

SETTING THE BRAKE

Make sure that your car is in **Park** or **Neutral**, and that the **parking brake is firmly set.**

NOTE: Some vehicles have an automatic release on the parking brake when the gear shift lever is removed from the PARK position. This feature must be disabled when it is necessary (for testing) to have the parking brake engaged when in the DRIVE position. Refer to your vehicle service manual for more information.

HOT SURFACES

Avoid contact with hot surfaces such as exhaust manifolds and pipes, mufflers (catalytic converters), radiator and hoses. Never remove the radiator cap while the engine is hot, as escaping coolant under pressure may seriously burn you.

SMOKING AND OPEN FLAMES

Never smoke while working on your car. Gasoline vapor is highly flammable, and the gas formed in a charging battery is explosive.

BATTERY

Do not lay tools or equipment on the battery. Accidentally grounding the "HOT" battery terminal can shock or burn you and damage wiring, the battery or your tools and testers. Be careful of contact with battery acid. It can burn holes in your clothing and burn your skin or eyes.

When operating any test instrument from an auxiliary battery, connect a jumper wire between the negative terminal of the auxiliary battery and ground on the vehicle under test. When working in a garage or other enclosed area, auxiliary battery should be located at least 18 inches above the floor to minimize the possibility of igniting gasoline vapors

HIGH VOLTAGE

High voltage — 30,000 to 50,000 volts — is present in the ignition coil, distributor cap, ignition wires and spark plugs. When handling ignition wires while the engine is running, use insulated pliers to avoid a shock. While not lethal, a shock may cause you to jerk involuntarily and hurt yourself.

JACK

The jack supplied with the vehicle should be used only for changing wheels. Never crawl under car or run engine while vehicle is on a jack.

VEHICLE MANUAL, SOURCES FOR SERVICE INFORMATION

The following is a list of publishers who have service manuals for your specific vehicle at nominal cost.

Write to them for availability and prices, specifying the make, style, and model year of your vehicle.

American Motors Corporation
Myriad
8835 General Drive
Plymouth Township, MI 48170

Chrysler Corporation
Dyment Distribution Service
Service Publication
20770 Westwood Drive
Strongsville, OH 44136

Ford Publications Department
Helm Incorporated
Post Office Box 07150
Detroit, MI 48207

Buick
Tuar Company
Post Office Box 354
Flint, MI 48501

Oldsmobile
Lansing Lithographers
Post Office Box 23188
Lansing, MI 48909

Cadillac, Chevrolet, Pontiac
Helm Incorporated
Post Office Box 07130
Detroit, MI 48207

OTHER SOURCES- Nonfactory

Domestic and Import Cars
Chilton Book Company
Chilton Way
Radnor, PA 19089

Cordura Publications
Mitchell Manuals, Inc.
Post Office Box 26260
San Diego, CA. 92126

Motor's Auto Repair Manual
Hearst Company
250 W. 55th Street
New York, NY 10019

IMPORTANT

CONSULT THE VEHICLE SERVICE MANUAL FOR SPECIFIC TUNE-UP INFORMATION AND TEST PROCEDURES. ALWAYS FOLLOW THE MANUFACTURER'S SPECIFICATIONS AND TEST PROCEDURES FOR ADJUSTING DWELL ANGLE AND IDLE SPEED, ESPECIALLY ON VEHICLES WITH MODERN ELECTRONIC IGNITION AND EMISSION CONTROLS. DO NOT ATTEMPT TO SERVICE A VEHICLE WITHOUT THE MANUFACTURER'S INSTRUCTIONS AND SPECIFICATIONS.

INTRODUCTION

Precise ignition timing is essential to achieve maximum fuel economy and performance out of any spark ignited engine. Your timing light provides a simple method for timing the engines used in today's vehicles. The advance timing light provides the additional capability of allowing the user to check timing advance curves of the vacuum, mechanical or computer controlled types.

Virtually all engines require that timing, both initial and advance calibrations be set, or checked at specific engine speeds, or in some cases with a specific vacuum applied to the vacuum advance diaphragm on the distributor, or on the vehicle's on-board computer. Your supplier offers a number of engine analyzers which are capable of measuring engine RPM, and vacuum pumps for application of vacuum when required. Contact him for further information on these instruments. In the case of engines which are equipped with breaker point ignition systems, it will be necessary to check and, if necessary, adjust point dwell **before** adjusting timing. Make certain that the instrument that you have or intend to purchase has dwell measurement capability.

Metal cased timing lights are for use on twelve (12) volt negative (-) ground systems only. Plastic cased timing lights may be used on six (6) or twelve (12) volt, positive (+) or negative (-) ground systems by following the simple instructions in this manual.

TWELVE (12) VOLT POSITIVE (+) GROUND ELECTRICAL SYSTEMS

Steps 4 and 5 of LEAD CONNECTIONS below are revised to read as follows:

4. Connect the BLACK clip to the negative (-) battery terminal.
5. Connect the RED clip to a secure engine ground such as the alternator/generator bracket or engine block. For safety reasons, do not use the positive (+) battery terminal or fuel system components as a ground connection point.

All other instructions remain as listed.

SIX (6) VOLT ELECTRICAL SYSTEMS

Follow the steps listed below to use your plastic timing light on vehicles equipped with six (6) volt electrical systems. A twelve (12) volt battery is required. This can be any automotive, or motorcycle battery.

1. Connect the RED clip from the timing light to the positive (+) terminal of the twelve (12) volt battery.
2. Connect the BLACK clip from the timing light to the negative (-) terminal of the twelve (12) volt battery.
3. Obtain a jumper wire (minimum wire size 18 AWG).
4. Connect one end of the jumper wire to the negative (-) terminal of the twelve (12) volt battery.
5. Connect the other end of the jumper wire to a clean, secure ground on the vehicle under test. The jumper wire must go to ground on the vehicle regardless of whether the vehicle is a positive (+) or negative (-) ground system.
6. Connection to the number one (1) spark plug and remaining procedures are the same as described later in this manual.

ENGINE PREPARATION FOR TIMING

In order for any engine to be **base (initially)** timed correctly, it is important to carefully follow the instructions as shown on the Vehicle Emission Control label. This label is located under the hood in the engine compartment. Some typical locations are: the underside of the hood, the fender well, a valve cover, or in the area of the hood latch. If the label is missing, consult the vehicle service manual or appropriate service literature for the engine under test. It is important to note that preparation is **specific** to each engine.

NOTE

The procedures outlined below instruct the user to connect the spark plug pickup (direct hookup or inductive clamp style) to the number one (1) spark plug wire. This procedure is valid for the majority of engines in use today. There are however, some engines which are timed using the "averaging" method. The most popular user of this method is General Motors where it is recommended for some of their smaller four (4) cylinder engines beginning in1982. Your timing light has "average timing" capability. The only change in hookup is that instead of connecting the spark plug pickup to the number one (1) spark plug wire, it is connected to the coil tower wire, that is, the wire between the ignition coil and the center of the distributor cap. Consult your vehicle service manual for exact procedures.

When using an **advance** timing light, note that average timing is used **only** for initial or base timing with the timing light's advance control set **fully counterclockwise at** "0". Timing advance measurements must be made with the inductive pickup clamped around the number one (1) spark plug wire. Timing advance measurements attempted with the inductive pickup clamped around the coil tower wire will not produce valid results.

LEAD CONNECTIONS

1. Figure 1 shows the typical hookup procedure for most applications. To insure safety, follow the hookup sequence listed below.
2. Make sure the engine is OFF, and the ignition key is OFF.
3. (Inductive Pickup equipped timing light) Clamp the inductive pickup around the number one (1) spark plug wire. Do not allow the inductive pickup to touch the exhaust manifold or surrounding parts as these areas become extremely hot and will damage the inductive clamp.

Fig. 1 - Hookup Diagram

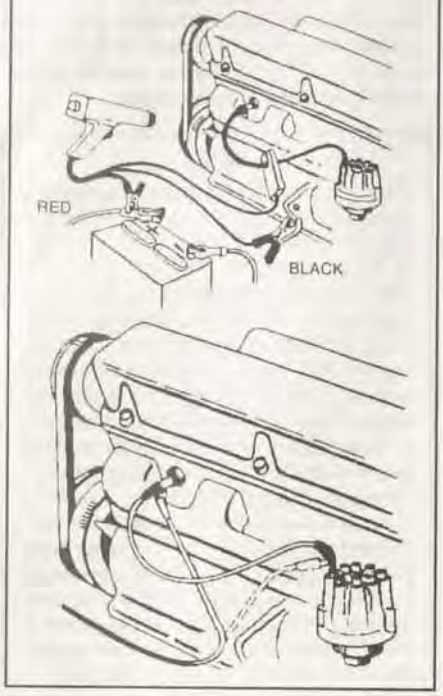

Route the timing light's spark plug wire away from the exhaust manifold and surrounding hot areas to prevent damage.

4. Connect the RED clip to the positive (+) battery terminal.
5. Connect the BLACK clip to a secure engine ground such as the alternator bracket or engine block. For safety reasons, do not use the negative (-) battery terminal or fuel system components as a ground connection point.

Fig. 2 - Various Timing Light Configurations

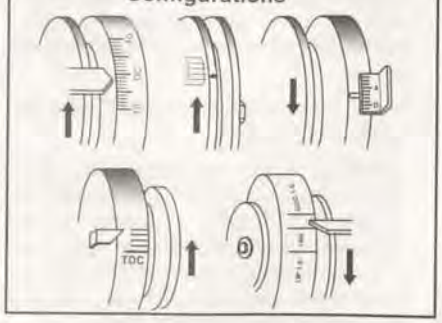

ENGINE TIMING CHECK

(Breaker point equipped engines only)

Check and, if necessary adjust dwell to specification **before** proceeding with timing check.

1. Prepare the engine for timing as indicated above in ENGINE PREPARATION FOR TIMING.
2. Clean, and chalk if necessary, both the rotating and stationary timing marks on the engine. See Figure 2.
3. Start the engine and allow it to warm to normal operating temperature (upper radiator hose is hot).
4. Check, and if necessary, adjust RPM to specified timing speed.
5. When using an **advance** timing light, make certain that the advance control is set fully counterclockwise at "O".
6. Aim the timing light at the crankshaft damper (pulley) or transmission bell housing depending on the location of the timing marks on the engine under test. See Figures 1 and 2.
7. Pull the trigger switch on the timing light and observe the location of the rotating mark with respect to the stationary mark. If timing is within the tolerance as specified by the manufacturer (typically plus or minus 2 degrees) no adjustment is necessary and the procedure is finished. If it is **not** within specifications, proceed **directly** to the INITIAL TIMING ADJUSTMENT section below. If the timing light multiple flashes or flashes erratically on timing lights equipped with an inductive pickup, see NOTE below.

NOTE

A defective ignition system may cause the timing light to multiple flash or flash erratically. Low output spark voltage or a defective ignition wire may be responsible. You may be able to steady the flash by sliding the inductive pickup along the plug wire to a new location or reversing the inductive pickup as shown in Figure 3. (This may also help even with polarity sensitive pickups). Solid copper ignition wires radiate large amounts of radio frequency noise through the air which may interfere with the proper op-

(continued on next page)

Fig. 3 - Positioning the Inductive Pickup for Reliable Readings

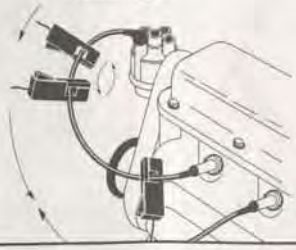

eration of the timing light and other electronic equipment. Replace solid copper ignition wire with resistance type wire if only for the tests described in this manual. Erratic flashing of the timing light can also be caused by dirt or grease buildup on the mating surfaces of the inductive clamp. To maintain proper operation of the clamp, clean and dry the inside clamp surfaces with a soft cloth when necessary as shown in Figure 4.

8. Shut off the engine. Disconnect the timing light leads in the reverse order from which they were connected.

Fig. 4 - Cleaning the Inductive Pickup

Timing Adjustments

1. Make certain that the engine has been prepared for timing as indicated above in ENGINE PREPARATION FOR TIMING.

NOTE

The following timing adjustment procedure can be used on the majority of spark ignited engines in use today. Both General Motors and Ford Motor Company have introduced and used special versions of their common electronic ignition systems which sense ignition directly from the engine's crankshaft via a crankshaft sensor. These systems were introduced in the late1970's and were typically used only on a few of the "high line" luxury passenger cars. Timing is still checked with a timing light in the standard manner, however, timing adjustment is made at the crankshaft sensor, **not** by turning the distributor as is normally done. See your vehicle service manual for exact adjustment procedures on this type system.

2. With the engine off, loosen the distributor hold down bolt just enough so that the distributor can be turned freely. Do not loosen the bolt beyond this point. See Figure 5.
3. Start the engine and allow it to warm to normal operating temperature (upper radiator hose is hot). Adjust engine RPM to the value specified by the vehicle manu-

Fig. 5 - Loosening the Hold-Down Clamp

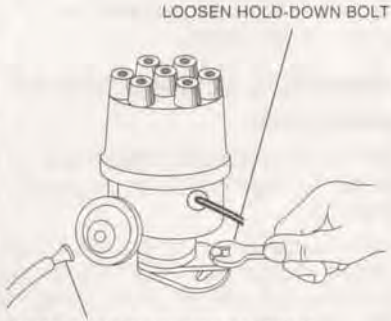

facturer for timing purposes. If no value is given, set the engine to curb idle.

4. Aim the timing light at the timing marks on the engine and pull the trigger switch.
5. With the trigger switch pulled, and while observing the timing marks, rotate the distributor slowly clockwise or counterclockwise as necessary to bring the timing into factory specification. On most engines, a change in timing will change engine RPM. If this happens, reset the engine RPM as indicated in Step 3 above and repeat Steps 4 and 5 until timing and RPM are within factory specifications.
6. Shut off the engine. Tighten the distributor hold down bolt securely.
7. Start the engine and recheck the timing. If it drifted during the bolt tightening process, readjust it as necessary.
8. Shut off the engine. Disconnect the timing light leads in the reverse order from which they were connected.
9. Reconnect any disconnected vacuum hoses or electrical connectors which were disconnected as part of the engine's preparation for timing. Reset the engine's idle speed if necessary.

TIMING ADVANCE

The following instructions apply only to advance timing lights.

The following advance system checks are general and may be used on most pre-emission controlled vehicles. Note however, that many vehicles have ignition and emission control systems, which may permit timing advance only under certain operating conditions. It is therefore important on these vehicles to check your vehicle service manual for specific instructions on how to perform advance system checks.

CENTRIFUGAL ADVANCE SYSTEM

Operational Test

1. Set the advance knob on the timing light to the **"0" degree** position as shown in Figure 7.
2. With the distributor vacuum line disconnected and plugged (Figure 5) and the engine at curb idle, aim the timing light at the timing marks, press the switch to operate the timing light and note the position of the timing mark as shown in Figures 2 and 7. The timing mark or pointer should appear to be opposite one of the numbers (initial timing) as shown.

Fig. 6 - Spark Advance Timing

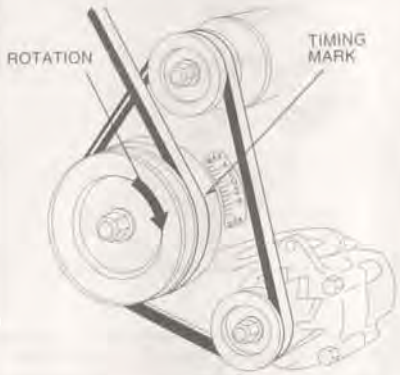

3. Gradually increase the engine speed to 2500 RPM while observing the timing mark position.
4. As the engine speed increases, the timing mark should appear to move smoothly in the opposite direction of engine rotation (the spark advance direction). See Figure 6. As engine speed is decreased, the timing mark should appear to move smoothly back to the initial timing mark noted in Step 2.

NOTE

Advance motion should be smooth. An uneven or erratic advance motion may indicate a defective centrifugal advance system which should then be serviced as necessary, according to the vehicle manufacturer's instructions.

Calibration/Accuracy Test

5. Operate the engine at curb idle, direct the timing light at the timing mark and turn the control knob upscale until the timing mark on the engine appears to be at "0" degrees. (See Figure 8) The number on the timing light dial indicates the initial advance in degrees, and should correspond to the number obtained in Step 2. (This step does not apply to those engines whose initial timing is **at** or **after** Top Dead Center, TDC).

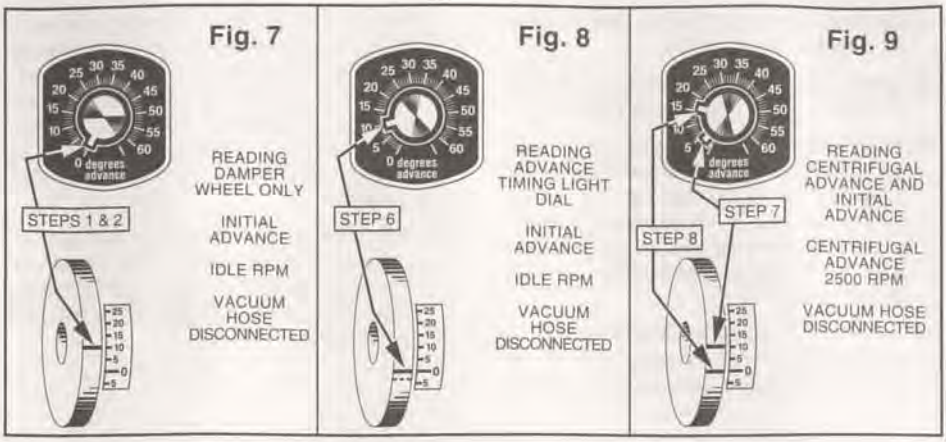

6. Operate the engine at 2500 RPM or as specified by the vehicle manufacturer for the centrifugal advance check. The timing mark may appear to move off scale, and beyond the highest number. This may be normal for the RPM being used and particular vehicle under test.

7. Direct the timing light at the timing mark and turn the control knob until the timing mark on the engine appears to return to the **initial timing position** (as noted in Step 2 above). The reading reached on the timing light dial now indicates the amount of centrifugal advance in **crankshaft or engine** degrees. (Figure 9). Repeat the test as required for various speeds as specified in the vehicle service manual.

> **NOTE**
>
> Some manufacturers give advance specifications in distributor degrees and distributor RPM. Since the distributor rotates at one half of engine or crankshaft speed, the distributor specifications should be one half of what is indicated on the advance timing light dial. Vehicle test speed must also be doubled if test speed is listed for distributor RPM. It is therefore important to know if the vehicle service manual is presenting specifications in "engine" or "distributor" degrees and RPM.

8. Continue to turn the control knob until the timing mark appears at the "0" degree (TDC) mark on the engine. The reading reached on the timing light dial now indicates the total advance, that is, the initial advance plus the centrifugal advance in degrees (Figure 9).

If initial timing specification is after TDC, this must be added to the timing light dial reading to obtain total advance. (You may also rotate the control knob further, to initial timing, thus eliminating the need for calculation. Total advance will then be shown). Check the result with manufacturer's specifications. Repeat the test as required for various speeds as specified in the vehicle service manual. If the reading does not meet the manufacturer's specification, it may indicate a problem with the centrifugal advance mechanism which should then be corrected by repair or replacement.

VACUUM ADVANCE SYSTEM CHECKS

Accurately checking the calibration of the vacuum advance system requires not only the advance timing light, but also a vacuum pump with gauge such as described in the INTRODUCTION at the beginning of this manual. Most vehicle service manuals will indicate specific advance in degrees for a given vacuum in inches of mercury. See your vehicle service manual for specific procedures. **As with the centrifugal advance system checks, note whether specifications are in distributor or engine degrees.**

9. Perform Steps 1-8 for the centrifugal advance system if not done as yet.

10. Stop the engine and connect your external vacuum pump to the vacuum diaphragm on the distributor or the vehicle's on-board computer.

11. Set the timing light's advance control to "0". Restart the engine.

12. Aim the timing light at the timing marks, pull the trigger and **note engine timing.**

13. Adjust engine RPM if necessary, and apply vacuum levels to the vacuum advance diaphragm as indicated by the vehicle service manual. (If it is necessary to reset engine RPM via service manual instruction, note engine timing again as indicated in Step12).

14. Turn the timing light's advance control up scale until the timing mark on the engine return to its starting point as noted in Step 12.

15. Note the timing advance (in degrees) with each application of vacuum and compare the result with service manual values. Failure to obtain the vacuum advance readings may indicate a leaky diaphragm, sticky advance mechanism, or lack of vacuum to drive the vacuum motor diaphragm.

16. After all testing is complete, make sure to reset any idle speeds and reconnect any hoses or electrical connectors which may have been disconnected during the test procedure.

Model 21027

INDUCTIVE TIMING LIGHT

Replacement Parts

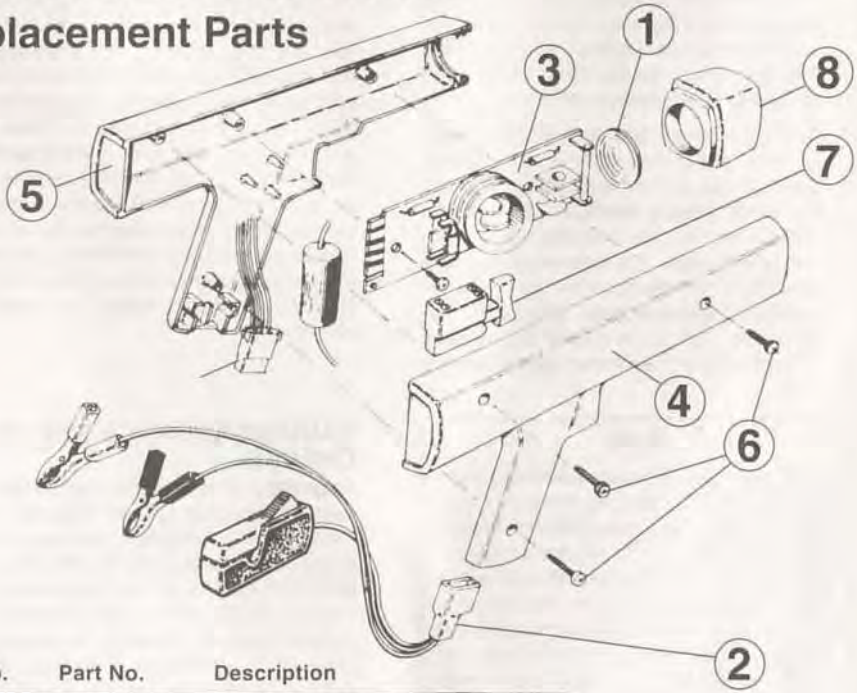

Key No.	Part No.	Description
1	0400-000-0557	Plastic Fresnel Lens for Timing Light
2	0038-000-0897	Input Cable Assembly
3	1000-000-3733	P.C. Board Assembly with Flash Tube
4	0180-000-1230	Case, Right Side
5	0180-000-1231	Case, Left Side
6	0270-000-0134	Screw, Self Tap #6-32 x 58" (3 pcs)
7	0700-000-0301	Switch
8	0400-000-1035	Nose Cone
9	0002-012-2162	Instruction Manual (Not shown)

Model 21023

INDUCTIVE ADVANCE TIMING LIGHT

Replacement Parts

CAUTION!

Do not disassemble – no user-serviceable parts inside. The Timing Light is calibrated at the factory and unauthorized servicing may affect accuracy of timing measurements. Refer servicing to qualified service personnel.

REPLACEMENT PART NO.

38-897 Pickup and Cable Assembly

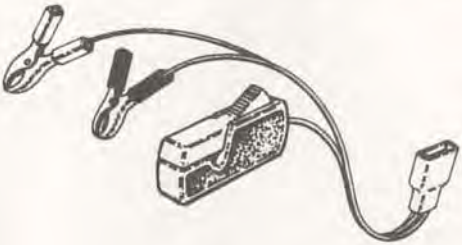

WARRANTY STATEMENT

If this automotive test instrument fails due to a defect in material or workmanship within one year from the date of purchase, RETURN IT TO THE NEAREST SEARS STORE OR OTHER CRAFTSMAN OUTLET IN THE UNITED STATES, and it will be repaired free of charge. This warranty gives you specific legal rights and you may also have other rights which vary from state to state.

Sears, Roebuck and Co., Hoffman Estates, Illinois 60179

NOTES
NOTAS

CRAFTSMAN.

owners manual

MODEL NOS.
21027
21023

HOW TO ORDER REPAIR PARTS

CÓMO ORDENAR PARTES DE REPARACIÓN

WHEN ORDERING REPAIR PARTS, ALWAYS GIVE THE FOLLOWING INFORMATION:

MODEL NUMBER
MODEL NAME
PART NUMBER
PART DESCRIPTION

All parts listed may be ordered from any Sears Service Center and most Sears stores.

If the parts you need are not stocked locally, your order will be electronically transmitted to a Sears Repair Parts Distribution Center for handling.

CUANDO ORDENE PARTES DE REPARACIÓN, DE SIEMPRE LA SIGUIENTE INFORMACIÓN:

NÚMERO DE MODELO
NOMBRE DEL MODELO
NÚMERO DE PARTE
DESCRIPCIÓN DE LA PARTE

Todas las partes en lista se pueden ordenar en cualquier centro de servicio SEARS o en la mayoría de sus tiendas.

Si la parte que usted necesita no está disponible en su localidad, su orden puede ser transmitida electrónicamente al centro SEARS de reparación y distribución de partes.

SEARS, ROEBUCK AND CO. U.S.A.
HOFFMAN ESTATES, ILLINOIS 60179